भारतीय प्रौद्योगिकी संस्थान गाँधीनगर
विश्वकर्मा शासकीय अभियांत्रिकी महाविद्यालय परिसर,
चाँदखेडा, अहमदाबाद, गुजरात - 382 424
INDIAN INSTITUTE OF TECHNOLOGY GANDHINAGAR
Vishwakarma Government Engineering College Campus,
Chandkheda, Ahmedabad, Gujarat - 382 424

Office : +91 79 2397 2583
Fax : +91 79 2397 2622
E-mail : office@iitgn.ac.in
website : http://www.iitgn.ac.in

IIT GN

Enquiry No: IITGN/ENQ/ADMIN/FUR/2011-12/398 Date: 23.12.2011

Last Date: 12th January, 2012 on/before 05:00pm

Sub: Invitation of sealed quotations for **Class Room Chairs and Study Tables.**

Dear Sir,

Indian Institute of Technology Gandhinagar invites sealed quotations in Indian Rupees for **Class Room Chairs and Study Tables** on the following Terms & conditions.

1. If the above mentioned item is available on **DGS&D rates**, please quote accordingly.
2. **Quantity:** As indicated in the below chart under topic-4.
3. **Important:** Please mention clearly the following:
    a. Basic Unit Price
    b. Additional accessory charges, if any
    c. Additional Taxes
    d. Installation, Delivery or other charges, if any
    e. Total price including taxes & other charges
    f. Date/Period of delivery
    g. Warranty / Guaranty
    h. Technical support, after sales service and annual maintenance contract requirement, if any
    i. Quotation validity minimum 90 days
    j. Terms & Conditions for Payment

INDIAN INSTITUTE OF TECHNOLOGY Gandhinagar 382424 GUJARAT

भारतीय प्रौद्योगिकी संस्थान गाँधीनगर
विश्वकर्मा शासकीय अभियांत्रिकी महाविद्यालय परिसर,
चाँदखेडा, अहमदाबाद, गुजरात - 382 424
INDIAN INSTITUTE OF TECHNOLOGY GANDHINAGAR
Vishwakarma Government Engineering College Campus,
Chandkheda, Ahmedabad, Gujarat - 382 424

Office : +91 79 2397 2583
Fax : +91 79 2397 2622
E-mail : office@iitgn.ac.in
website : http://www.iitgn.ac.in

IIT GN

4. **Required Specifications:**

Sr. No.	Complete Description of Items	Quantity Required
1.	Study Table – MDF top and apron As per Annexure - I	40
2.	Class Room Chair – Stackable with wooden planks as seat and backrest As per Annexure – II	80

5. A **sealed quotation** marked with **"Class Room Chairs and Study Tables"** to be sent to the following address **on/before 05:00pm, 12th January, 2012.**

Assistant Registrar (MM)
IIT Gandhinagar
Vishwakarma Government Engineering College Campus
Ground Floor, Block "A",
Visat-Gandhinagar Highway, Chandkheda
Ahmedabad - 382424.

INDIAN INSTITUTE OF TECHNOLOGY Gandhinagar 382424 GUJARAT

Sd/-
Assistant Registrar (MM)

ANNEXURE-I

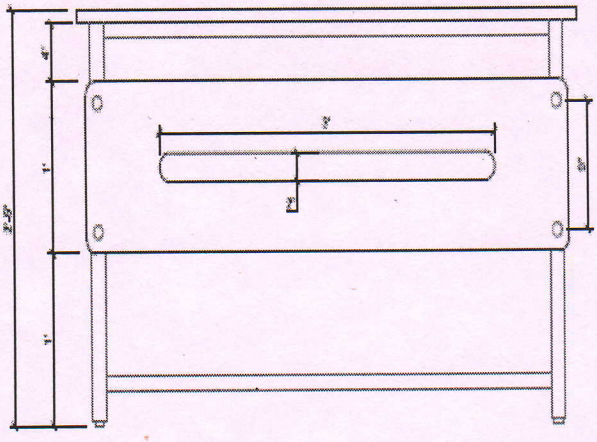

FRONT ELEVATION

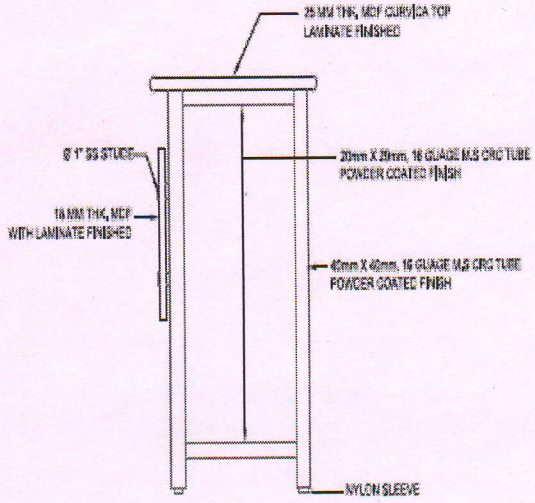

SIDE ELEVATION

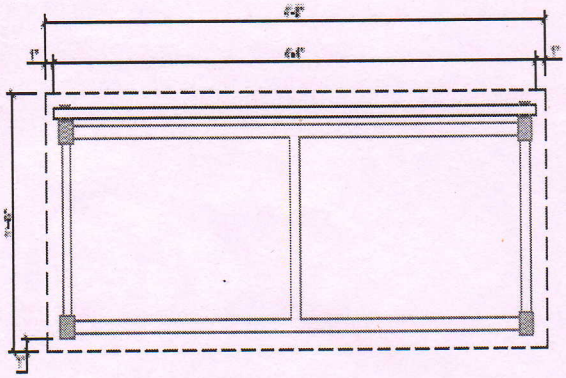

PLAN OF TOP FRAME

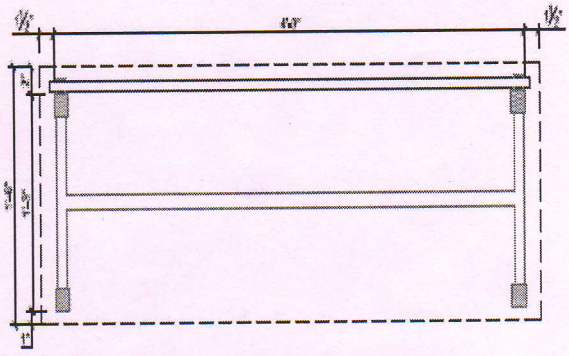

PLAN OF BOTTOM FRAME

INDIAN INSTITUTE OF TECHNOLOGY GANDHINAGAR

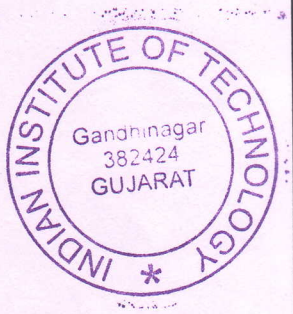

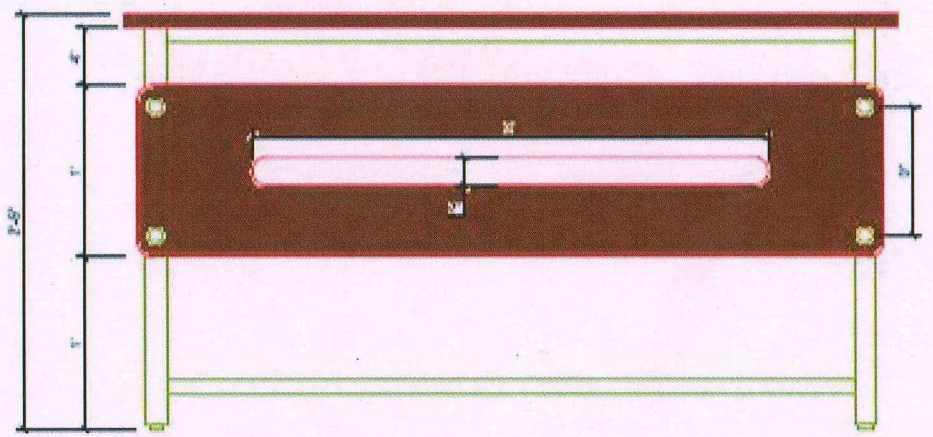

FRONT ELEVATION

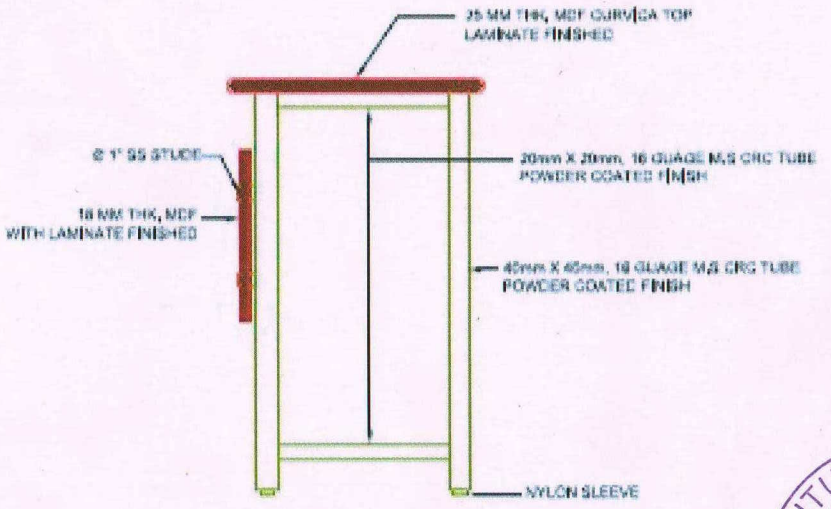

SIDE ELEVATION

INDIAN INSTITUTE OF TECHNOLOGY
Gandhinagar
382424
GUJARAT

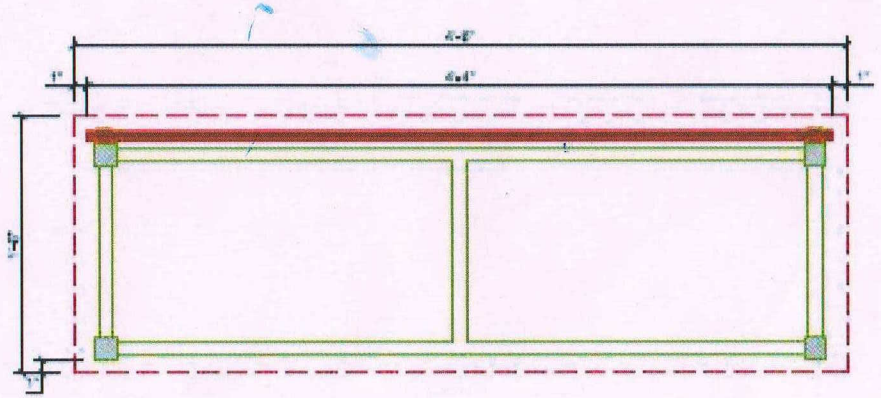

PLAN OF TOP FRAME

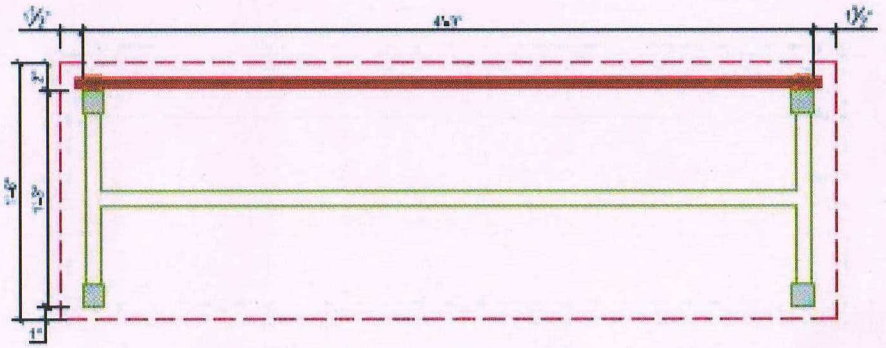

PLAN OF BOTTOM FRAME

ANNEXURE-II

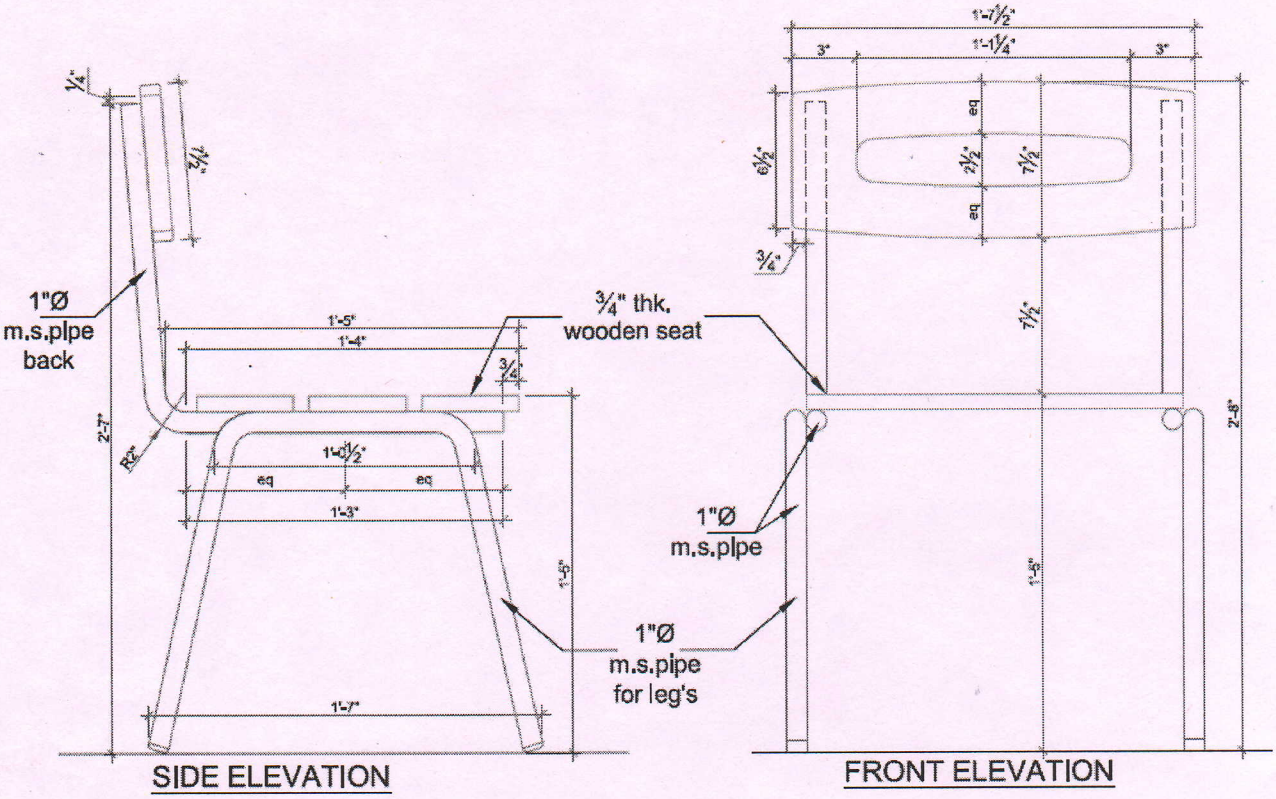

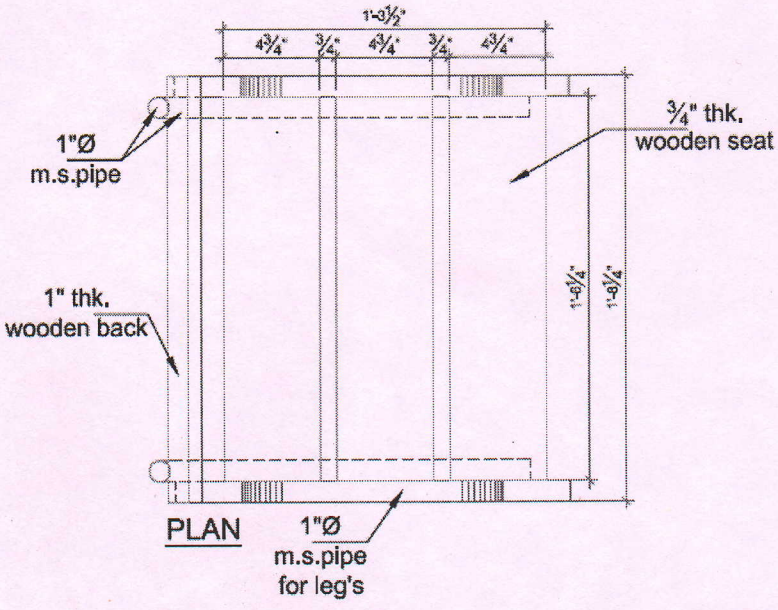

INDIAN INSTITUTE OF TECHNOLOGY
Gandhinagar
382424
GUJARAT

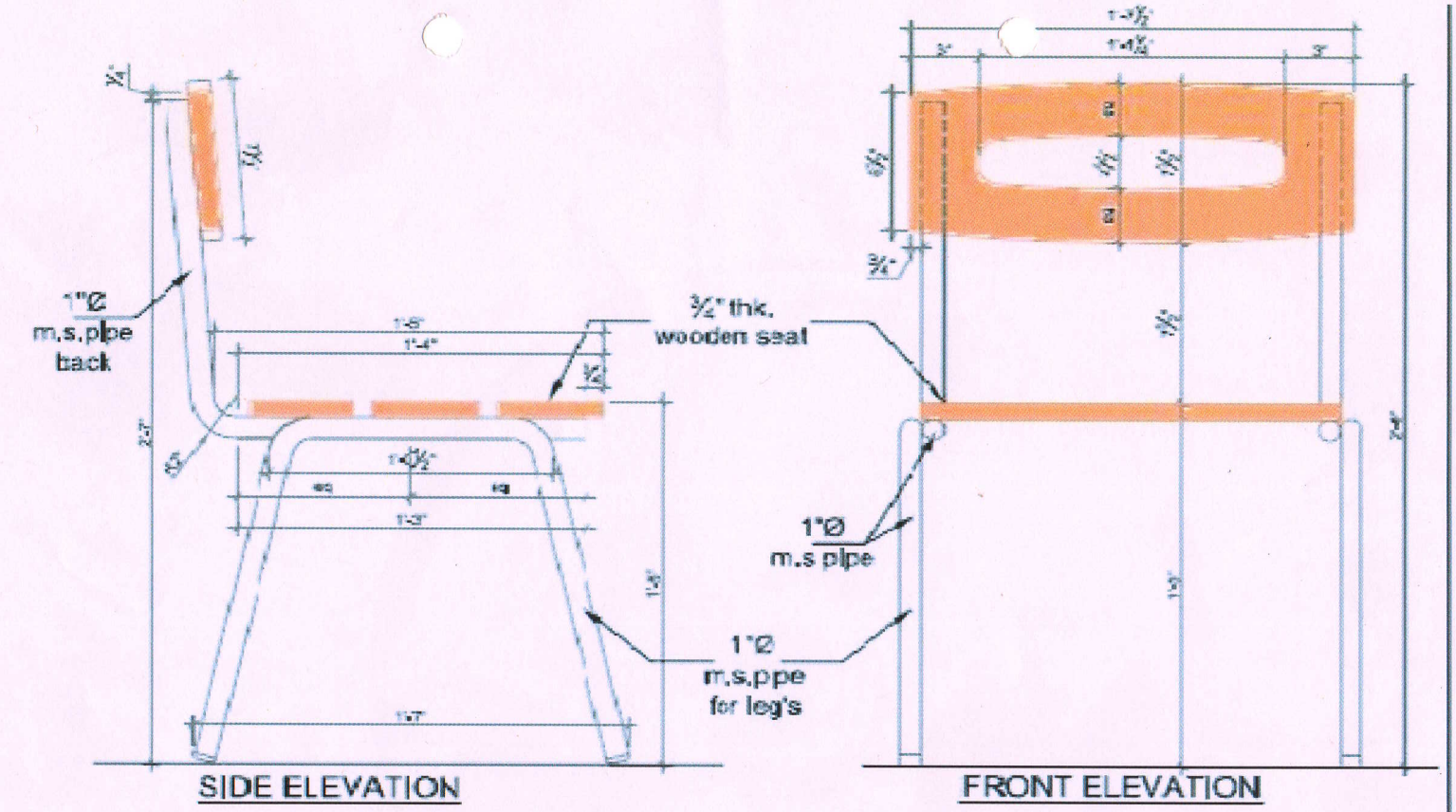

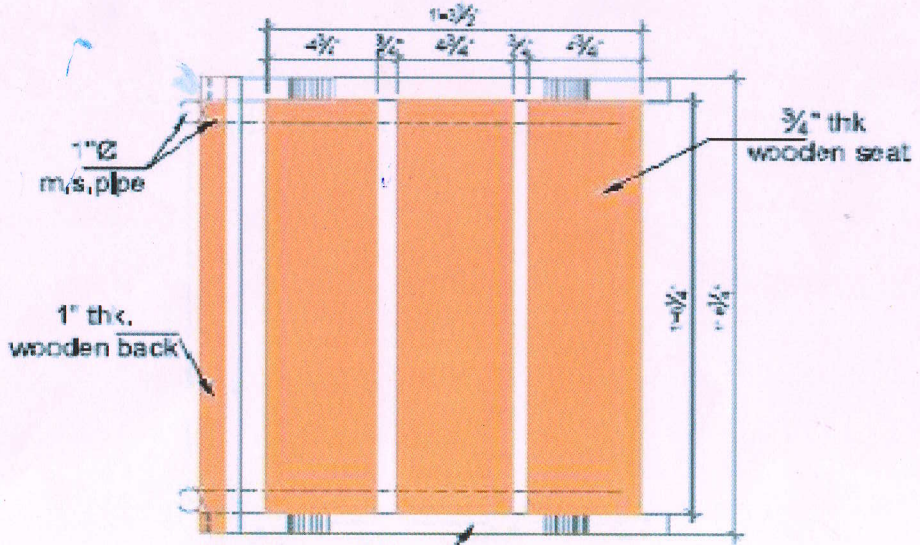

INDIAN INSTITUTE OF TECHNOLOGY
Gandhinagar
382424
GUJARAT